## THIRD FLOOR

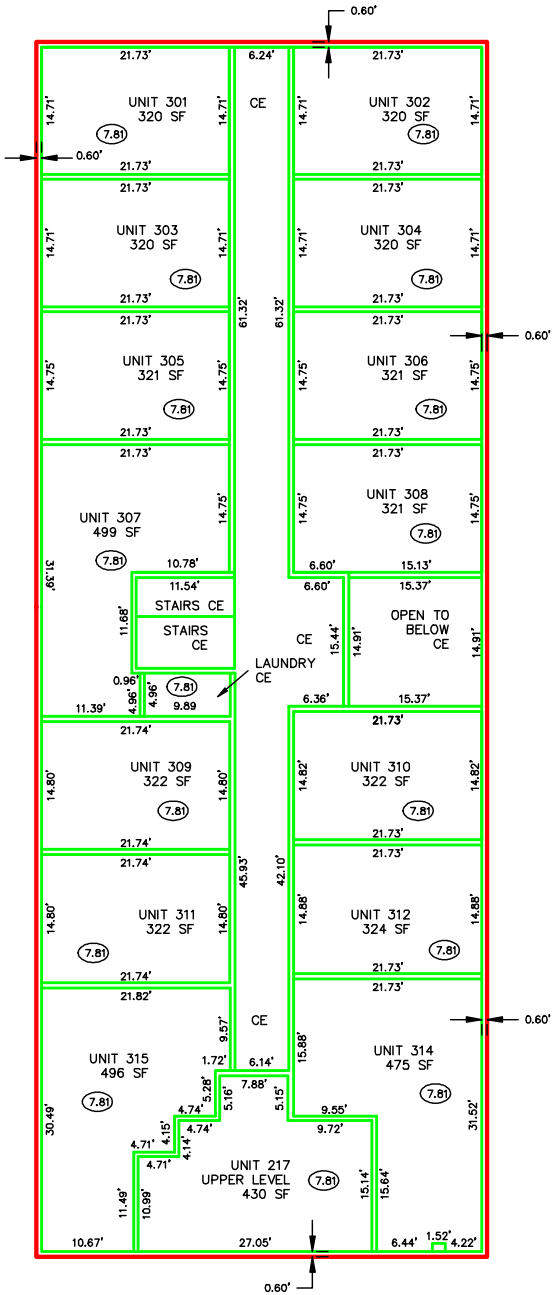


## SECOND FLOOR

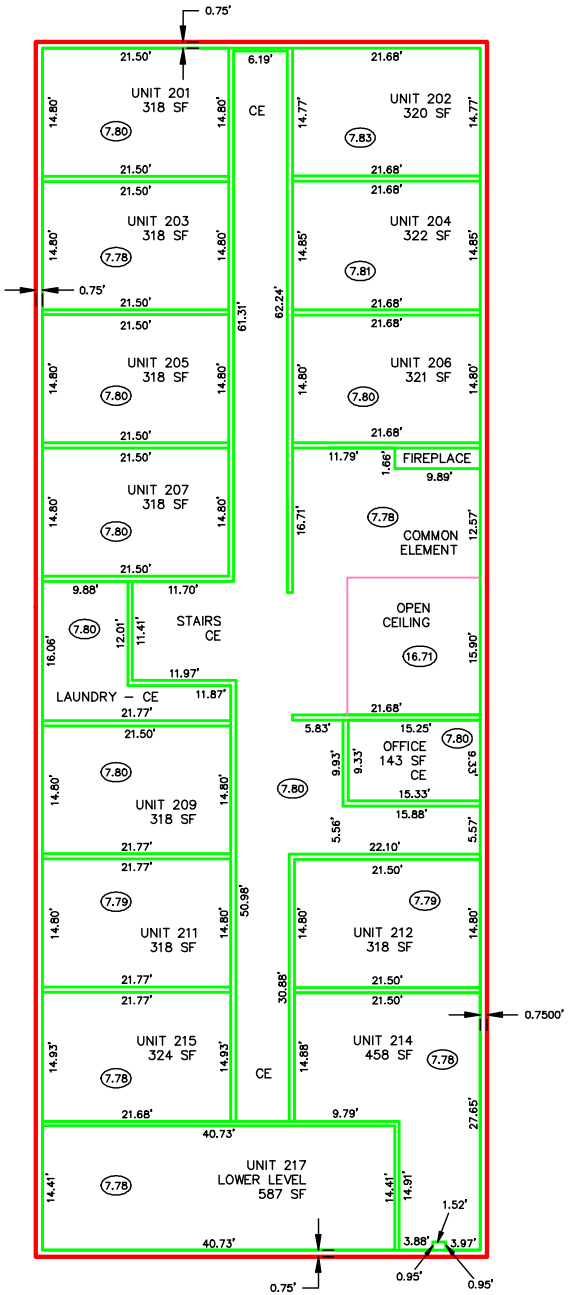

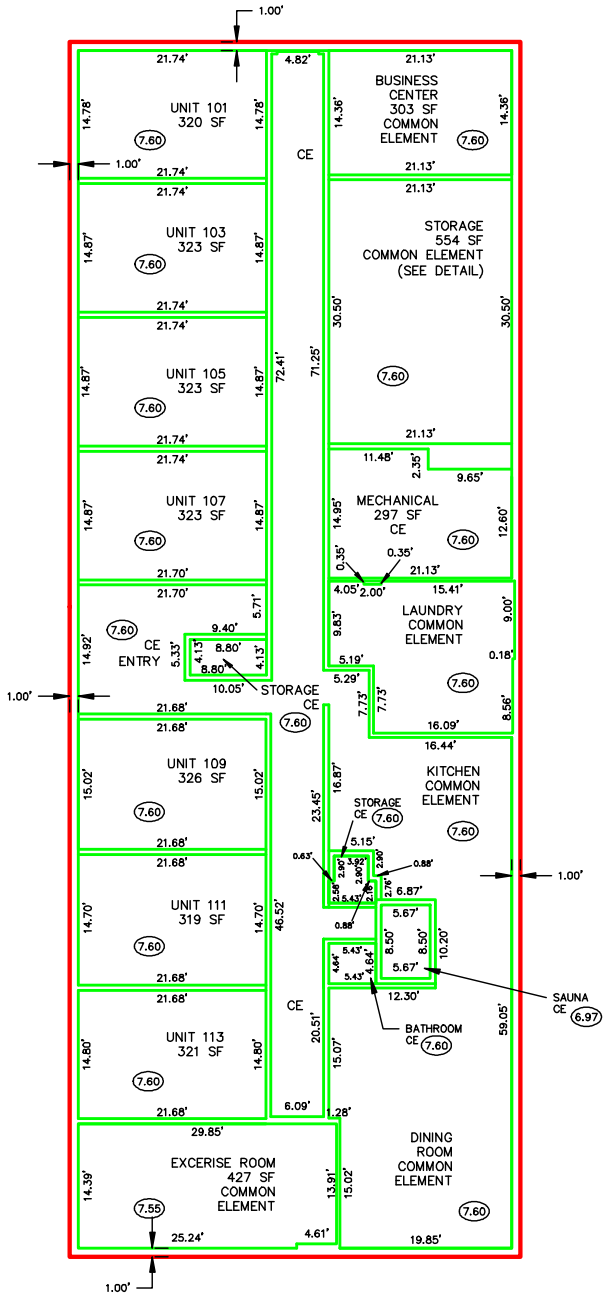
## FIRST FLOOR